DIGITAL LOGIC FUNDAMENTALS

Course Code	:30801220
Credit Hours	:3
Prerequisite	: 30801101

Chapter 7

AIM: To design and construct half adder circuit and verify the truth table using IC/ logic gates.

,

REQUIRED:

Sl.No.	COMPONENT	QTY.
1.	AND GATE	1
2.	X-OR GATE	1
3.	NOT GATE	1
4.	OR GATE	1

THEORY:

A half adder has two inputs for the two bits to be added and two outputs one from the sum ‘ S’ and other from the carry ‘ c’ into the higher adder position.

TRUTH TABLE:

INPUT		OUTPUT	
A	B	CARRY(C)	SUM(S)
0	0	0	0
0	1	0	1
1	0	0	1
1	1	1	0

DESIGN:

	INPUT	OUTPUT	
A	B	CARRY(C)	SUM(S)
0	0	0	0
0	1	0	1 (minterm =A'B)
1	0	0	1 (minterm =AB')
1	1	1 (minterm=AB)	0

Boolean Equation:

SUM : S=A'B+AB' (EX-OR GATE)

CARRY: C=AB

CIRCUIT DIAGRAM:

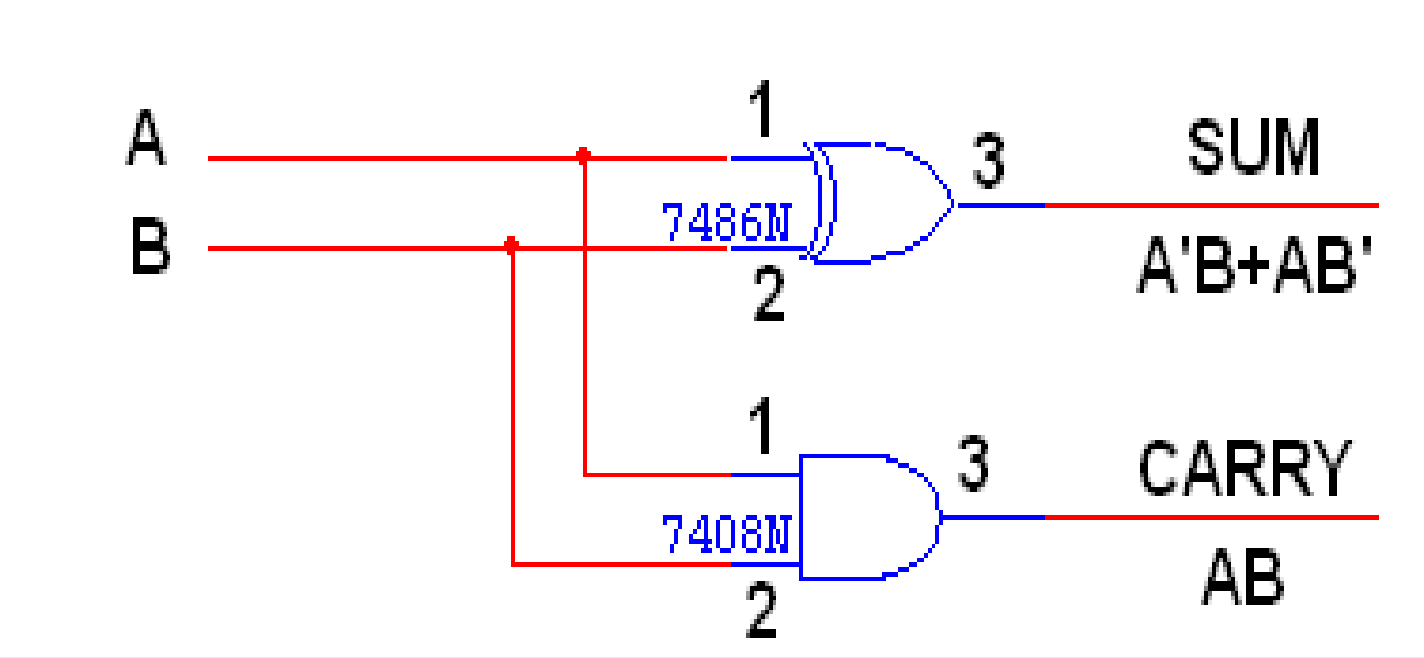

AND Gate

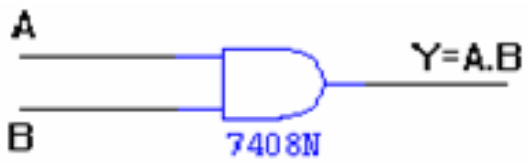

TRUTH TABLE

A	B	A.B
0	0	0
0	1	0
1	0	0
1	1	1

XOR Gate

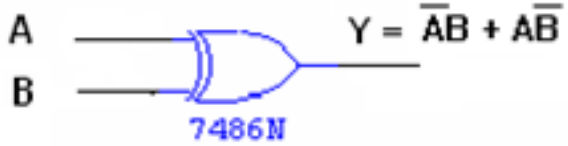

TRUTH TABLE :

A	B	$\overline{A}B + A\overline{B}$
0	0	0
0	1	1
1	0	1
1	1	0

Application of half Adder circuit:

1) The ALU (arithmetic logic circuitry) of a computer uses half adder to compute the binary addition operation on two bits.

2) Half adder is used to make full adder as a full adder requires 3 inputs, the third input being an input carry i.e. we will be able to cascade the carry bit from one adder to the other.

AIM: To design and construct Full adder circuit and verify the truth table using IC/ logic gates.

REQUIRED:

Sl.No.	COMPONENT	QTY.
1.	AND GATE	1
2.	X-OR GATE	1
3.	NOT GATE	1
4.	OR GATE	1

THEORY: A full adder is a combinational circuit that forms the arithmetic sum of input; it consists of three inputs and two outputs. A full adder is useful to add three bits at a time but a half adder cannot do so.

TRUTH TABLE:

A	B	C	Carry (C)	Sum (S)
0	0	0	0	0
0	0	1	0	1
0	1	0	0	1
0	1	1	1	0
1	0	0	0	1
1	0	1	1	0
1	1	0	1	0
1	1	1	1	1

DESIGN:

A	B	C	Carry (C)	Sum (S)
0	0	0	0	0
0	0	1	0	1(minterm=A'B'C)
0	1	0	0	1(minterm=A'BC')
0	1	1	1(minterm=A'BC)	0
1	0	0	0	1(minterm=AB'C')
1	0	1	1(minterm=AB'C)	0
1	1	0	1(minterm=ABC')	0
1	1	1	1(minterm=ABC)	1(minterm=ABC)

Boolean Equation:

SUM : S= A'B'C+A'B C'+AB'C'+ABC (EX-OR GATE)

CARRY: C=A'BC+AB'C+ABC'+ABC Reducing by K-Map

C=AB+BC+CA

CIRCUIT DIAGRAM:

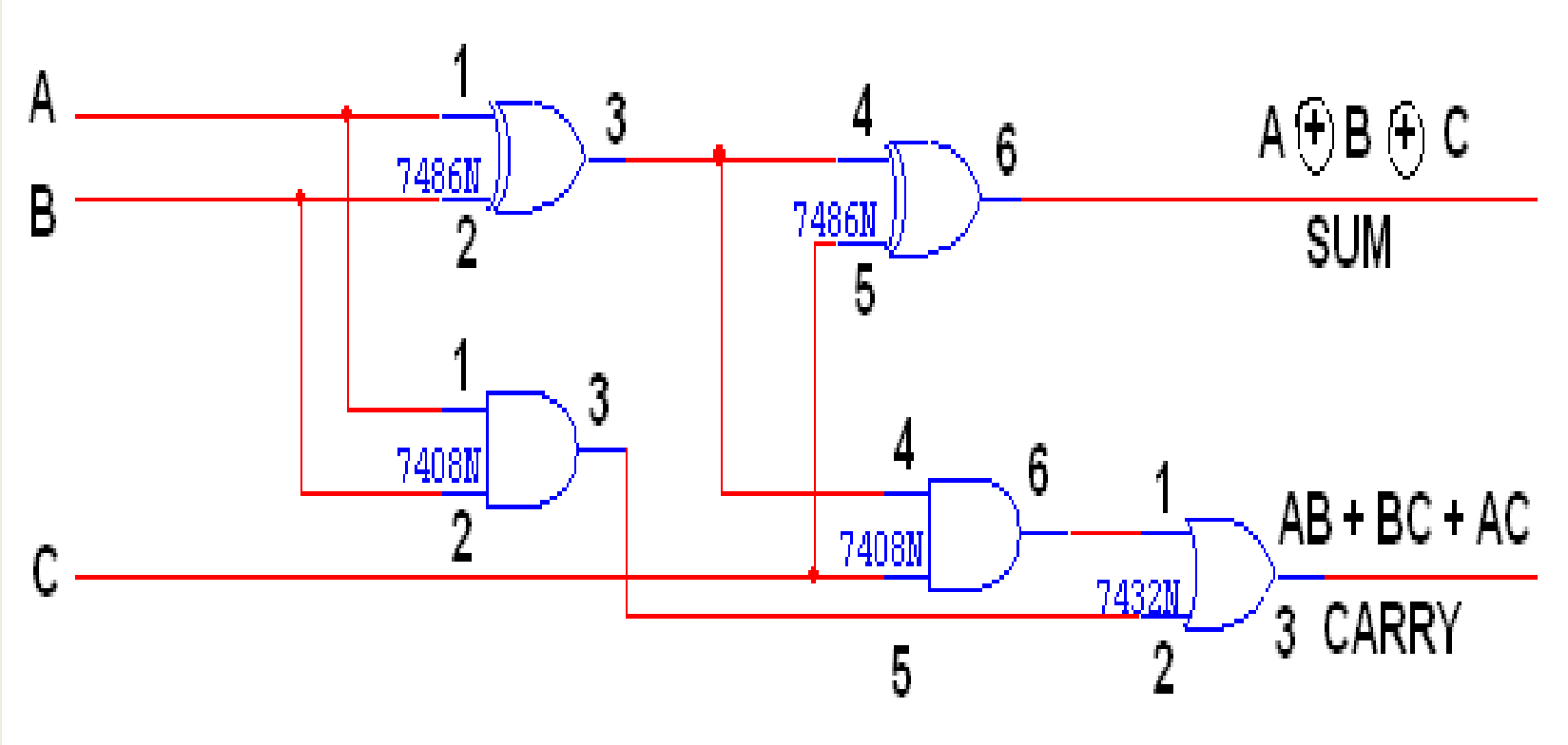

OR Gate

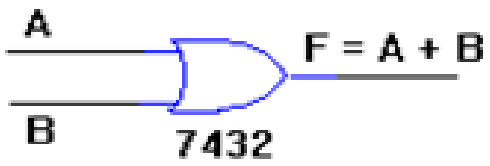

TRUTH TABLE

A	B	A+B
0	0	0
0	1	1
1	0	1
1	1	1

Example

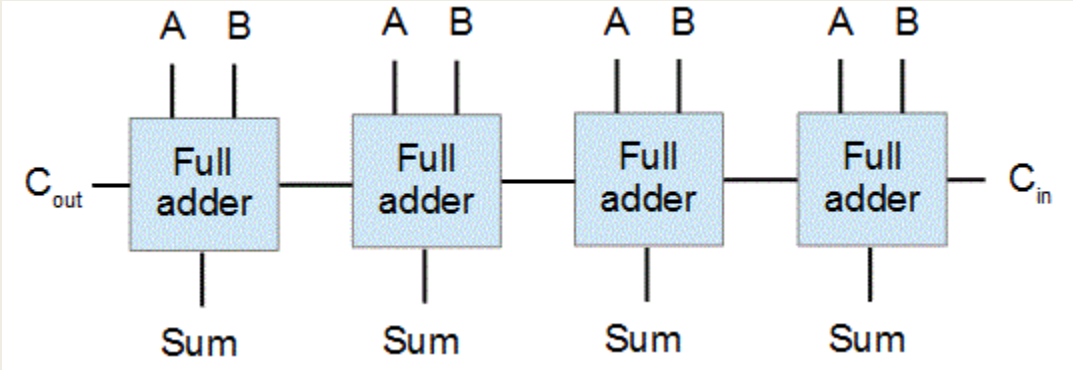

				0 ← C_{in}
	1	1	1	0
+	1	0	1	1
1	**1**	**0**	**0**	**1**

C_{out} sum

USES OF FULL ADDER

- Basic building block of on-chip libraries.
- Configured according to desired complexity of arithmetic and numeric computations.
- In processors and other kinds of computing devices, adders are used in the arithmetic logic unit.
- Adders also use in other parts of the processor, where they are used to calculate addresses, table indices, and similar operations.